$y = a + bx$

$r^2$ = explained variance

$$r = \sqrt{\text{explained variance}}$$

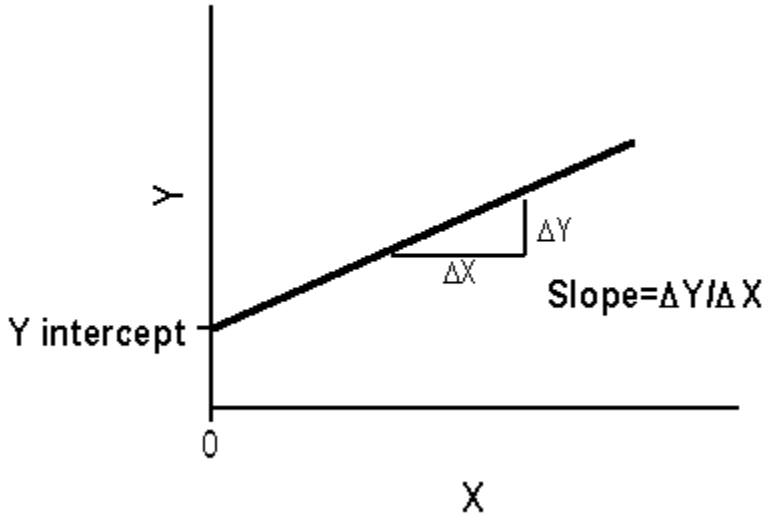
Y
ΔY
ΔX
Slope=ΔY/ΔX
Y intercept
0
X

$$y = a + bx_1 + bx_2$$

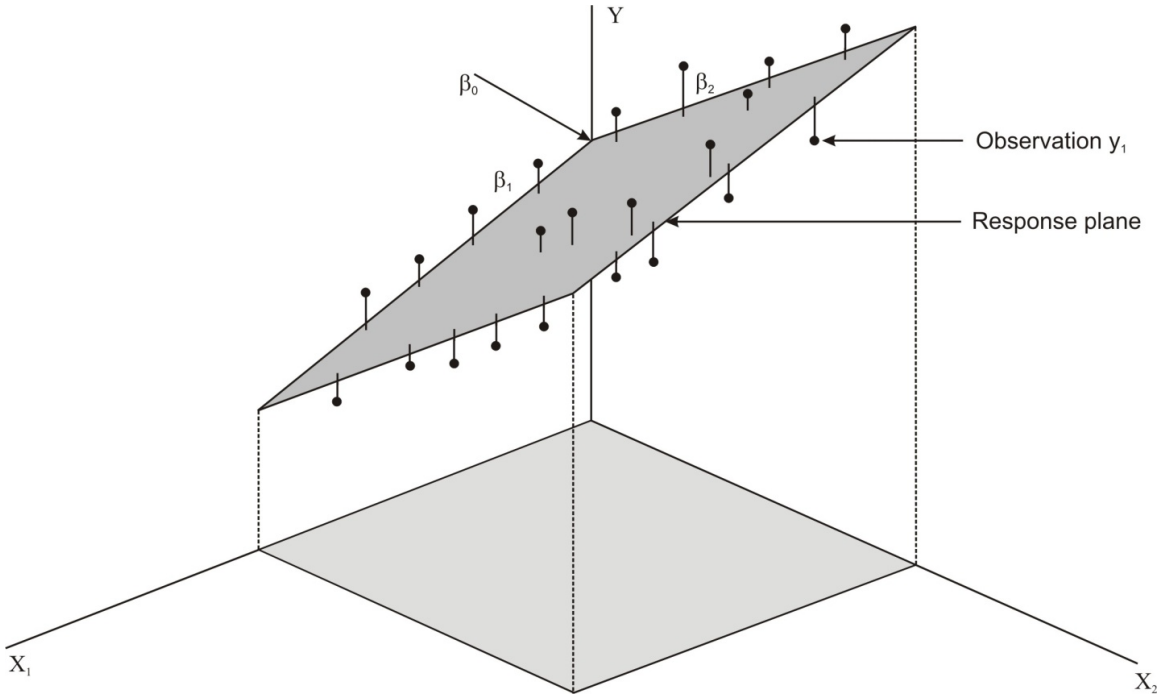

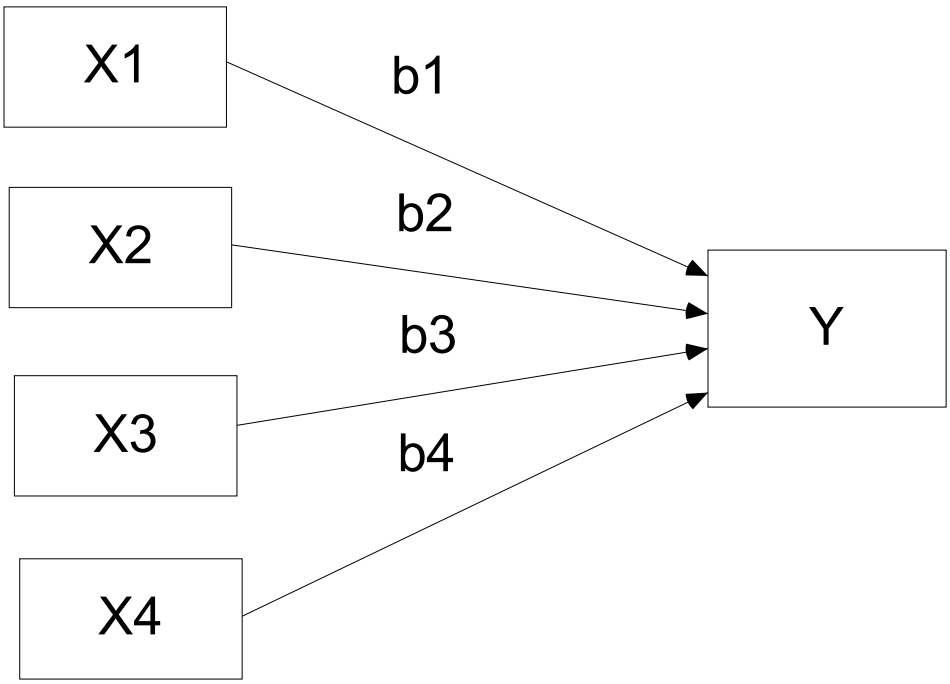


Adj.$R^2$= .33

N=1024

$$SD = \sqrt{\frac{\sum(x_i - \bar{x})}{N}}$$

$$Y = a + \beta x_1 + \beta x_2 + \beta x_3 \ldots$$

```
*Regression of RecMJIndex on ideology, age, educ, interest*.

regression variables=RawMJ3 liberal5 age educ interest
  /statistics anova coeff r tol
  /descriptives = n
  /dependent = RawMJ3
  /method = enter.
```

```
*Correlation matrix-DV & IVs*.
corr RawMJ3 liberal5 age educ interest.
```

**Correlations**

| | RawMJ3 | liberal5 | age | educ | interest |
|---|---|---|---|---|---|
| RawMJ3 | 1 | | | | |
| liberal5 | .361 | 1 | | | |
| age | -.209 | -.132 | 1 | | |
| educ | .120 | .146 | .043 | 1 | |
| interest | .122 | .079 | .147 | .316 | 1 |

## Correlations

| | | RawMJ3 | liberal5 | age | educ | interest |
|---|---|---|---|---|---|---|
| N | RawMJ3 | 951 | 951 | 951 | 951 | 951 |
| | liberal5 | 951 | 951 | 951 | 951 | 951 |
| | age | 951 | 951 | 951 | 951 | 951 |
| | educ | 951 | 951 | 951 | 951 | 951 |
| | interest | 951 | 951 | 951 | 951 | 951 |

## Variables Entered/Removed[a]

| Model | Variables Entered | Variables Removed | Method |
|---|---|---|---|
| 1 | interest, liberal5, educ, age[b] | . | Enter |

a. Dependent Variable: RawMJ3
b. All requested variables entered.

## Model Summary

| Model | R | R Square | Adjusted R Square | Std. Error of the Estimate |
|---|---|---|---|---|
| 1 | .441[a] | .195 | .191 | 1.03824 |

a. Predictors: (Constant), interest, liberal5, educ, age

## ANOVA[a]

| Model | | Sum of Squares | df | Mean Square | F | Sig. |
|---|---|---|---|---|---|---|
| 1 | Regression | 246.285 | 4 | 61.571 | 57.150 | .000[b] |
| | Residual | 1019.642 | 946 | 1.078 | | |
| | Total | 1265.928 | 950 | | | |

a. Dependent Variable: RawMJ3
b. Predictors: (Constant), interest, liberal5, educ, age

**Coefficients[a]**

| Model | | Unstandardized Coefficients B | Unstandardized Coefficients Std. Error | Standardized Coefficients Beta | t | Sig. | Tolerance |
|---|---|---|---|---|---|---|---|
| 1 | (Constant) | .654 | .123 | | 5.325 | .000 | |
| | liberal5 | 1.283 | .111 | .344 | 11.525 | .000 | .958 |
| | age | -.647 | .105 | -.184 | -6.132 | .000 | .945 |
| | educ | .218 | .126 | .052 | 1.733 | .083 | .929 |
| | interest | .707 | .126 | .171 | 5.606 | .000 | .917 |

**RawMJ3 = .65 + 1.28liberal - .65age +.22educ +.71interest**

| Model | | Unstandardized Coefficients B | Unstandardized Coefficients Std. Error | Standardized Coefficients Beta | t | Sig. | Tol |
|---|---|---|---|---|---|---|---|
| 1 | (Constant) | .592 | .129 | | 4.572 | .000 | |
| | liberal5 | 1.136 | .131 | .303 | 8.643 | .000 | .719 |
| | Democrat5 | .210 | .121 | .060 | 1.744 | .081 | .749 |
| | age | -.632 | .108 | -.180 | -5.877 | .000 | .938 |
| | educ | .253 | .128 | .061 | 1.970 | .049 | .920 |
| | interest | .693 | .128 | .168 | 5.403 | .000 | .914 |

N = 925; Adj $R^2$ = .184

**Comparing Two Models of Support for RawMJ3**

| | | Model 1 | | | Model 2 | | |
|---|---|---|---|---|---|---|---|
| | | Beta | Sig | Tol | Beta | Sig | Tol |
| | liberal5 | .344 | .000 | .958 | .303 | .000 | .719 |
| | Democrat5 | | | | .060 | .081 | .749 |
| | age | -.184 | .000 | .945 | -.180 | .000 | .938 |
| | educ | .052 | .083 | .929 | .061 | .049 | .920 |
| | interest | .171 | .000 | .917 | .168 | .000 | .914 |
| | | N= 951; Adj $R^2$= .191 | | | N = 925 ; Adj R2 = .184 | | |

```
graph
    /scatterplot(xyz)=liberal5 with RawMJ3 with age.
```

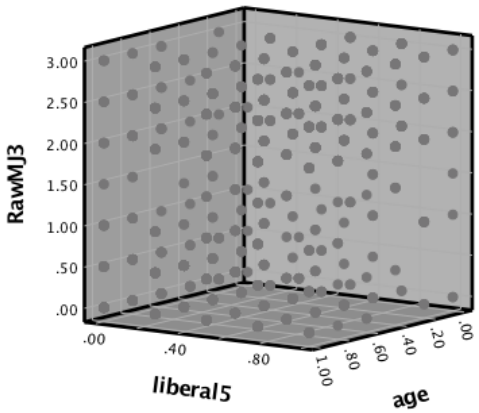


Cases weighted by Final adjusted weight

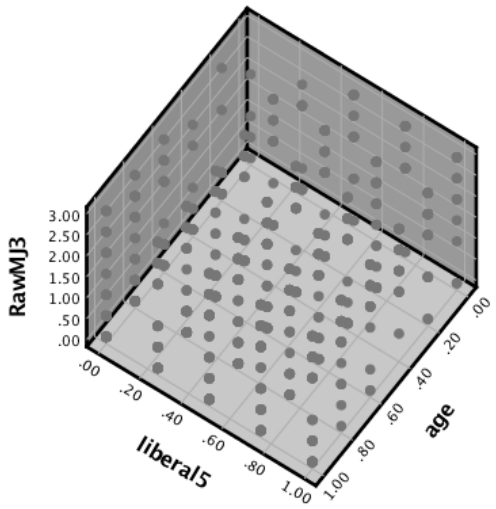


Cases weighted by Final adjusted weight

**Syntax Used for MJ3 Regression**

```
*Weighting the Data*.
weight by weight.
*Recoding MJ Index Items*.
recode q21 (1=1) (2=0) into MJPropD.
value labels MJPropD 1 'yes' 0 'no'.
recode q36 (1=1) (2=0) into MJLegalD.
value labels MJLegalD 1 'yes' 0 'no'.
recode q36a (1=1) (2=.5) (3=.0) into MJTry.
value labels MJTry 1 'recent' .5 'not recent' 0 'no'.
*Constructing an Index with alpha = .777*.
compute RawMJ3 = (MJPropD + MJLegalD + MJTry).
*Creating IV Indicators of Party Identification & Ideology*.
recode q37 (1=1) (2=.75) (3= .5 ) (4=.25) (5= 0) into liberal5.
value labels liberal5 1 'vlib' .75 'liberal'.5 'middle' .25 'conserv' 0 'vcons'.
recode d1a (1=0) (2= .2) (3= .4) (4=.6) (5=.8) (6=1) into age.
value labels age 0 '18+' .2 '25+' .4 '35+' .6 '45+' .8 '55+' 1 '65+'.
recode d6 (1=0) (2=.25) (3=.5) (4=.75) (5=1) into educ.
value labels educ 0 '<hs' .25 'hs' .5 'col' .75 'grad' 1 'post'.
recode q38 (1=1) (2=.66) (3=.33) (4=0) into interest.
value labels interest 0 'none' .33 'only a little' .66 'fair amount' 1 'great deal'.

corr RawMJ3 Liberal5 age educ interest.
regression variables=RawMJ3 Liberal5 age educ interest
  /statistics anova coeff r tol
  /descriptives = n
  /dependent = RawMJ3
 /method = enter.

graph
    /scatterplot(xyz)=liberal5 with RawMJ3 with age.
```

**Party ID Syntax**

```
*Democrat5 (adapted from from lab 7)*.
if (q40c = 1) and (q40e =1) Democrat5 =0.
if (q40c = 1) and (q40e =2) Democrat5 =.25.
if (q40c = 3) Democrat5 =.5.
if (q40c =2) and (q40d =2) Democrat5 = .75.
if (q40c =2) and (q40d=1) Democrat5 =1.
value labels Democrat5 0 'strRep' .25 'Rep' .5 'Indep' .75 'Dem'
  1 'strDem'.
```

Syntax for 7 point PId measure in March 2018 data for Andrew Gonzales

```
if (q39 = 2) and (q39a = 1) Dem7 =1.
if (q39= 2) and (q39a ge 2) Dem7 = .834.
if (q39 ge 3) and (q39c = 2) Dem7 = .667.
if (q39 ge 3) and (q39c ge 3) Dem7 = .5.
if (q39 ge 3) and (q39c = 1) Dem7 = .334.
if (q39=1) and (q39b ge 2) Dem7 = .167.
if (q39 =1) and (q39b =1) Dem7 =0.
value labels Dem7 1 'StrDem' .834 'Dem' .667 'LeanDem' .5 'Indep' .334 'LeanRep'
.167 'Rep' 0 'StrRep'.

fre var Dem7.
```